Vista Mfg., Inc.
53345 Columbia Dr
Elkhart, IN 46514

Round Krystal Lite (RKL) w/LED

- Available tube colors: red, blue, amber, clear and smoke
- Available LED colors are red, blue, green, amber, white, warm white, and purple
- UV additive inhibits color fading
- Water resistant
- UL, CSA, and FAA approved options available
- Maximum length - 12'

LED TYPE	COLOR	COLOR TEMP	LUMENS (3 leds per set)	AMPS PER SET (3 leds per set)
160°	White	6500 - 7500K	11.44/set	0.02/set
160°	Warm White	2900 - 3200K	9.15/set	0.02/set
160°	Blue	470nm	1.72/set	0.02/set
160°	Red	630nm	3.48/set	0.02/set
160°	Amber/Yellow	591nm	3.71/set	0.02/set
160°	Green	525nm	1.79/set	0.02/set

Material: Semi-Rigid, High Impact Polycarbonate

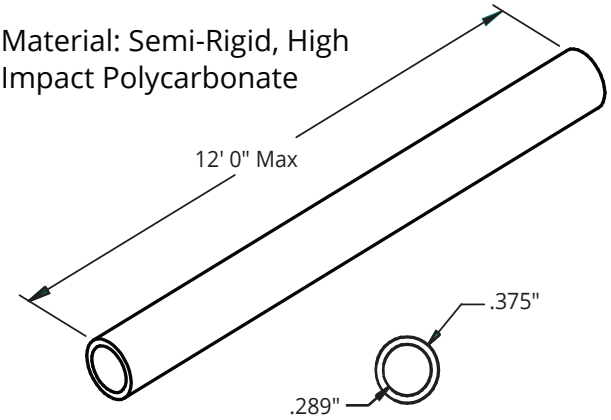

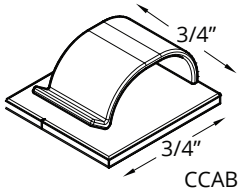

Adhesive Back C-Clip

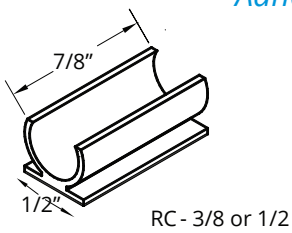

Round Clip

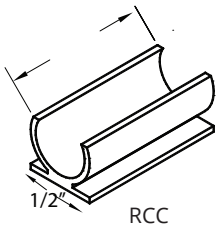

Round Continuous Clip

All mounting hardware is UV stabilized plastic